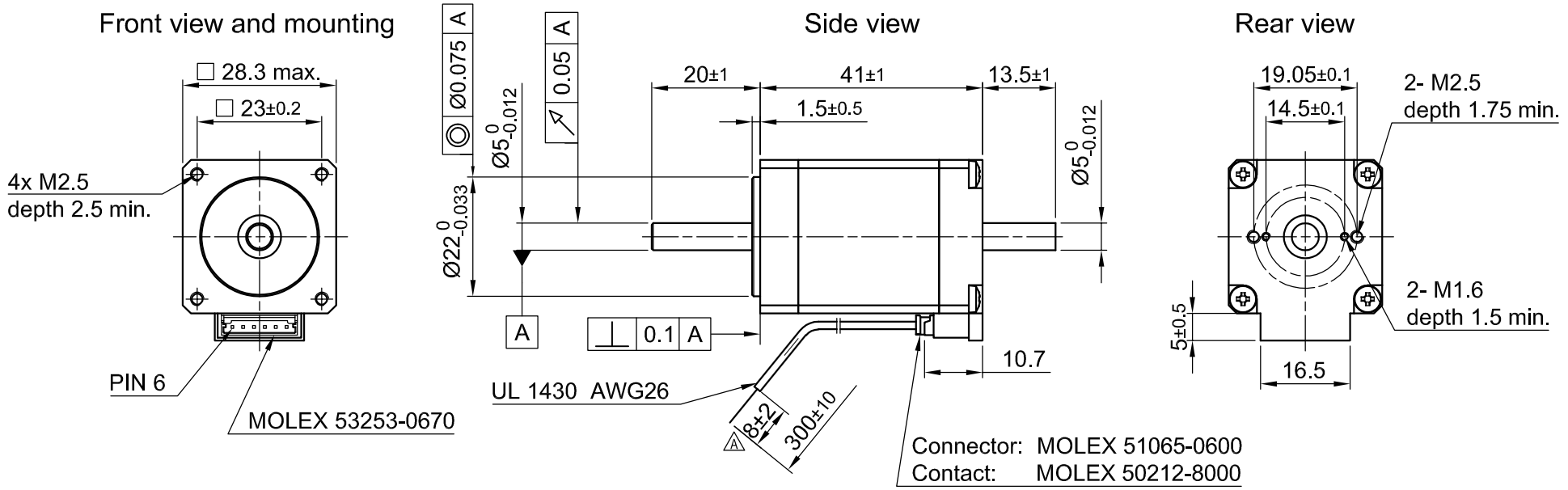

SPECIFICATION \ CONNECTION	BIPOLAR SERIES
VOLTAGE (VDC)	2.2
AMPS/PHASE	1.5
RESISTANCE/PHASE (Ohms)@20°C	1.45±10%
INDUCTANCE/PHASE (mH) @1KHz	1.25±20%
HOLDING TORQUE (Nm) [lb-in]	0.135 [1.19]
STEP ANGLE (°)	1.8
ACCURACY (NON-ACCUM)	±5%
ROTOR INERTIA (Kg-m²) [lb-in²]	1.2x10⁻⁶ [0.004]
WEIGHT (Kg) [lb]	0.14 [0.31]

TEMPERATURE RISE: MAX.80°C

ATTN: MAKE SURE TEMPERATURE OF MOTOR CASE REMAINS BELOW 100°C

AMBIENT TEMPERATURE -20°~ +50°C [-4°F ~ 122°F]

INSULATION RESISTANCE 100 MOhm (UNDER NORMAL TEMPERATURE AND HUMIDITY)

INSULATION CLASS B 130° [266°F]

DIELECTRIC STRENGTH 500VAC FOR 1 MIN. (BETWEEN THE MOTOR COILS AND THE MOTOR CASE)

AMBIENT HUMIDITY MAX. 85% (NO CONDENSATION)

PERMISSIBLE RADIAL+AXIAL FORCE

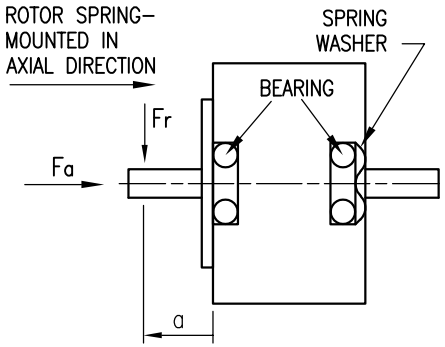

AXIAL-FORCE Fa (N)	Fa=7	
DISTANCE a (mm)	5	
RADIAL-FORCE Fr (N)	28 max.	
	AXIAL	RADIAL
SHAFT PLAY (mm)	0.08	0.02
AT LOAD MAX. (N)	4	4

TYPE OF CONNECTION (EXTERN)	MOTOR		
BIPOLAR	CONNECTOR PIN NO.	LEADS	WINDING
A —	1	BK	A
A\ —	3	GN	A\
B —	4	RD	B
B\ —	6	BU	B\

FULL STEP 2 PHASE-Ex.,
WHEN FACING MOUNTING END (X)

STEP	A	B	A\	B\		CCW
1	+	+	−	−		
2	−	+	+	−		
3	−	−	+	+		
4	+	−	−	+	CW	

WIRING DIAGRAM

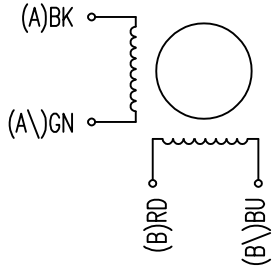

REV	DESCRIPTION	DATE	DRN
A	–	23.10.17	G.S.

Nanotec® PLUG & DRIVE

Surface specification DIN ISO 1302 | General tolerances DIN ISO 2768-cH | Work piece edge DIN ISO 13715

		SIGNATURE	DATE
APVD	G.S.		19.07.16
CHKD			
DRN	A.S.		14.07.16

STEPPING MOTOR

DWG.NO SC2818M1504-B