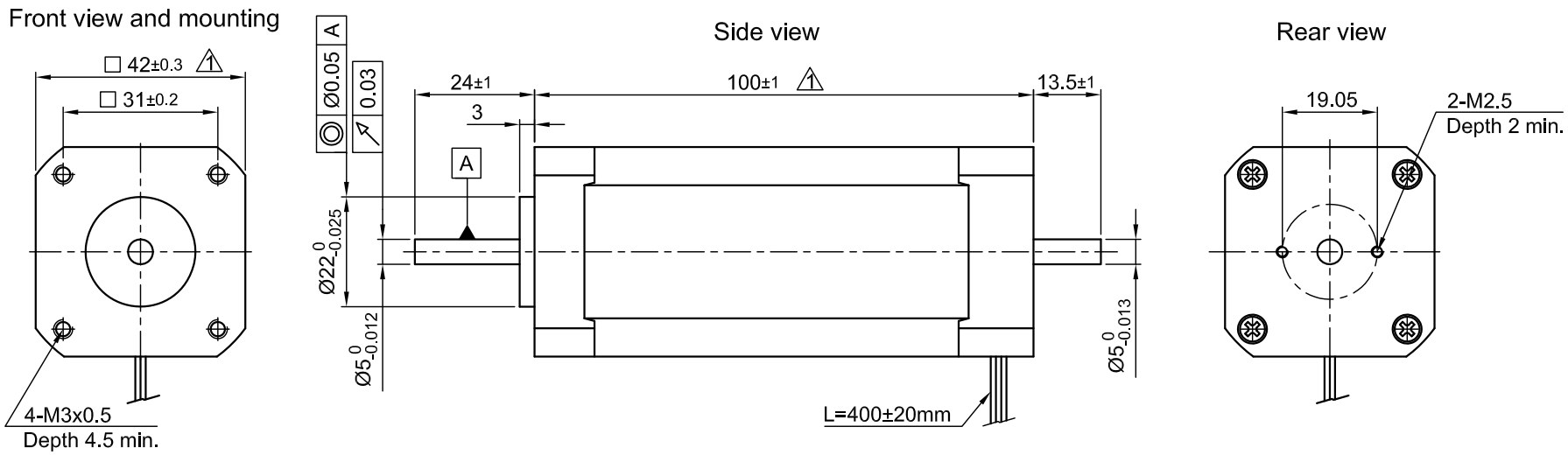

SPECIFICATION / CONNECTION	DELTA
NO. OF POL./PHASE	8/3
VOLTAGE RATED (VDC)	48
CURRENT NO LOAD/RATED/PEAK (AMP)	0.8/3.57/10.71
RESISTANCE/PHASE TO PHASE (Ohms) @25°C	0.2±15% 2
INDUCTANCE/PHASE TO PHASE (mH) @1KHz	0.32±20%
TORQUE RATED/PEAK (Nm) [lb-in]	0.10/0.30 [0.885/2.655]
TORQUE CONSTANT (Nm/A)	0.028 4
POWER RATED (W)	147 5
SPEED RATED/NO LOAD (RPM) 4	14000/16500
ROTOR INERTIA (Kg-m²) [lb-in²]	8.86×10^{-6} [3.03×10^{-2}] 6
WEIGHT (Kg) [lb]	0.75 [1.654]

PERMISSIBLE RADIAL+AXIAL FORCE

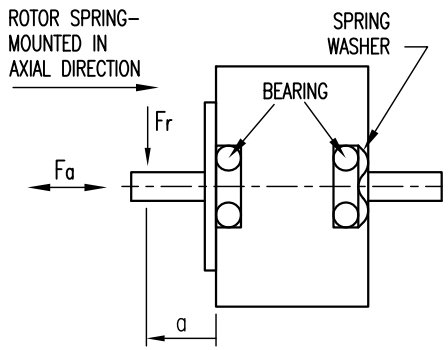

AXIAL-FORCE Fa (N)	Fa=10	
DISTANCE a (mm)	20	
RADIAL-FORCE Fr (N)	28	
	AXIAL	RADIAL
SHAFT PLAY (mm)	0.08	0.02
AT LOAD MAX: (N)	4.5	4.5

TEMPERATURE RISE: MAX.80°C
AMBIENT TEMPERATURE -10°~ 50°C [14°F ~ 122°F]
INSULATION RESISTANCE 100 MOhm (UNDER NORMAL TEMPERATURE AND HUMIDITY)
INSULATION CLASS B 130° [266°F]
DIELECTRIC STRENGTH 500VAC FOR 1 MIN. (BETWEEN THE MOTOR COILS AND THE MOTOR CASE)
AMBIENT HUMIDITY MAX. 85% (NO CONDENSATION)

3 WIRING DIAGRAM

	COLOR	FUNCTION	Dir. ←						LEAD GAUGE
MOTOR 8 POL.	YEL	U	X	HI	HI	X	LOW	LOW	1 UL1430 AWG20
	RED	V	HI	X	LOW	LOW	X	HI	
	BLK	W	LOW	LOW	X	HI	HI	X	
HALL 24 IMPL. REV.	RED	+5V							1 UL1430 AWG26
	BLU	H1	0	0	0	1	1	1	
	WHT	H2	0	1	1	1	0	0	
	GRN	H3	1	1	0	0	0	1	
	BLK	GND							

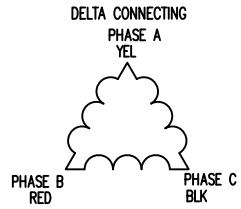

REV	DESCRIPTION	DATE	DRN
6	CHANGE ROTOR INERTIA	08.09.15	A.S.
5	CHANGE POWER RATED	16.06.15	A.S.
4	UPDT. DATA	24.10.14	J.D.

Nanotec® PLUG & DRIVE

DB42C02

SCALE FREE

X	±0.5
1PL	±0.2
2PL	±0.1
ANGLE	±30'

	SIGNATURE	DATE
APVD	S.Ha.	19.06.07
CHKD		
DRN	J.W.	10.11.06

BRUSHLESS DC MOTOR

DWG.NO DB42C02